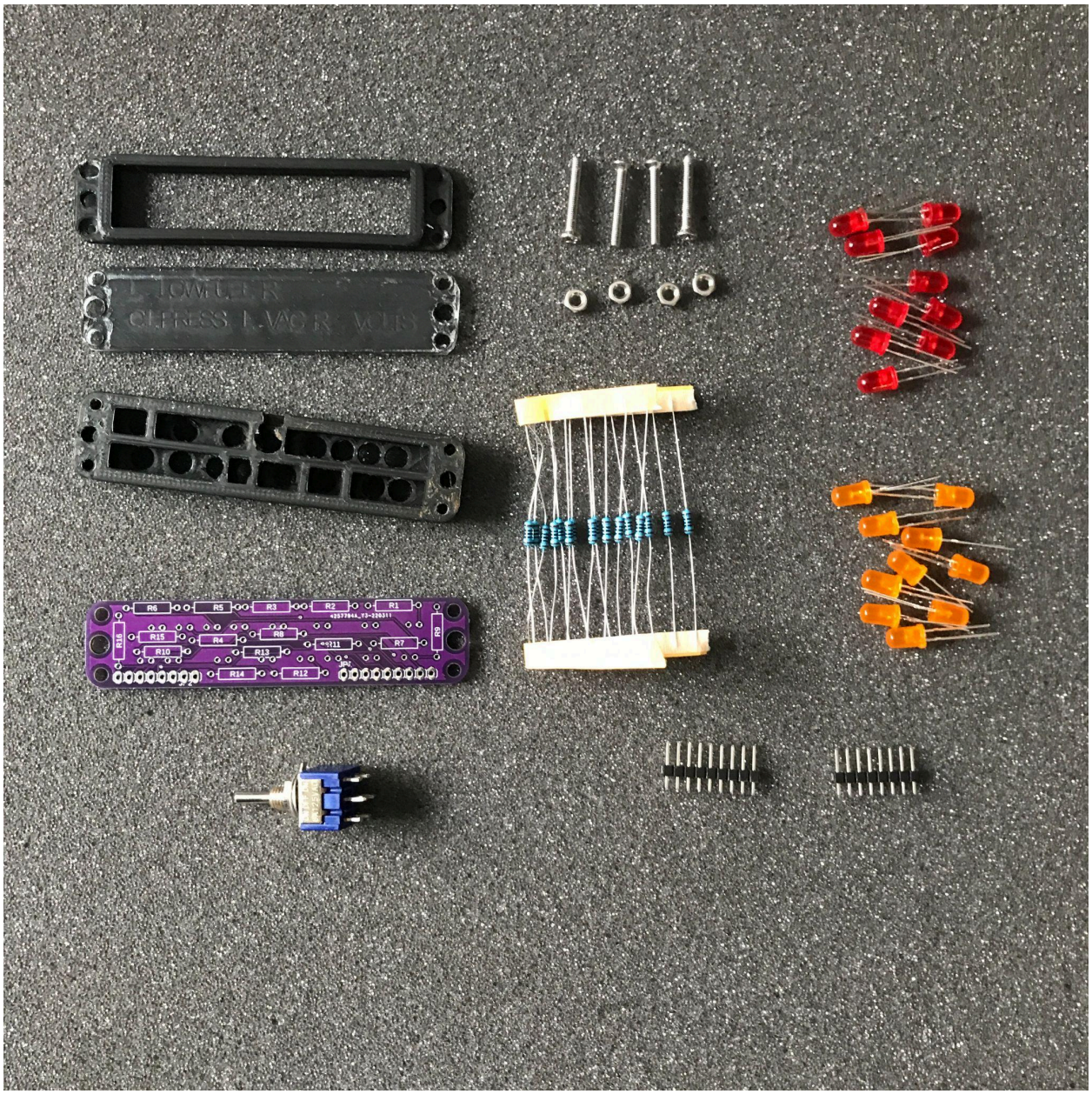

Warning Annunciator Build Guide

The Cessna 172 Project

Support the Project Here! CaptainBobSim.com/project-support

Bill of Materials

- 3D Printed bezel
- Engraved Warning piece
- 3D Printed Light holding module
- Annunciator Circuit Board
- x20 100 ohm resistors
- x4 M3 20mm Countersunk screws
- x4 M3 nuts
- x10 Red LEDs, x10 Orange LEDs
- Pin Headers
- 3 position switch (on) off on

Versions:

Version 5.0 Wiring is here:

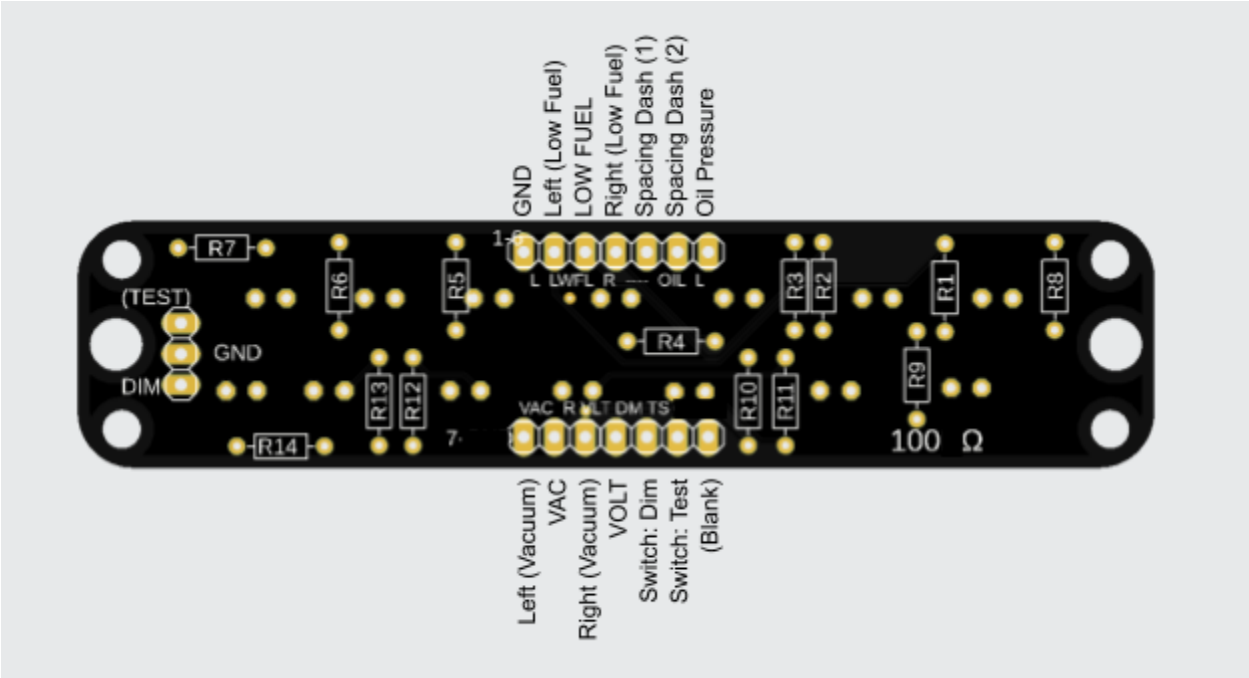

The circuit board may have a white dot on pin 1 and “GND” to show the relationship between the two.

Assembly

For the assembly solder the LEDs the long end of the LEDs faces. There's a flat side of the LED, and this should align with the flat side of the circle.

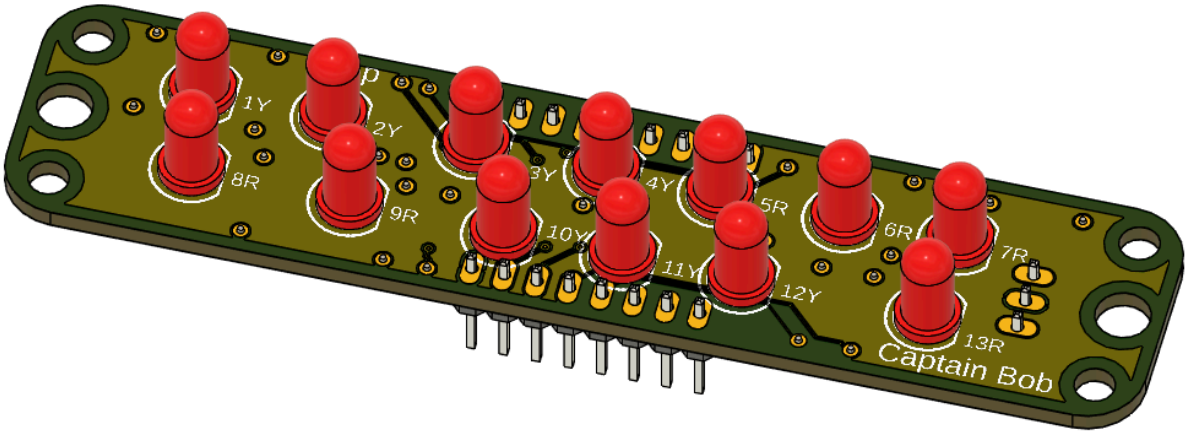

Note - LED Color not shown. “Y” for Yellow/Amber and “R” for red designation is shown on the front.

R is for Red
Y is for Yellow/Orange
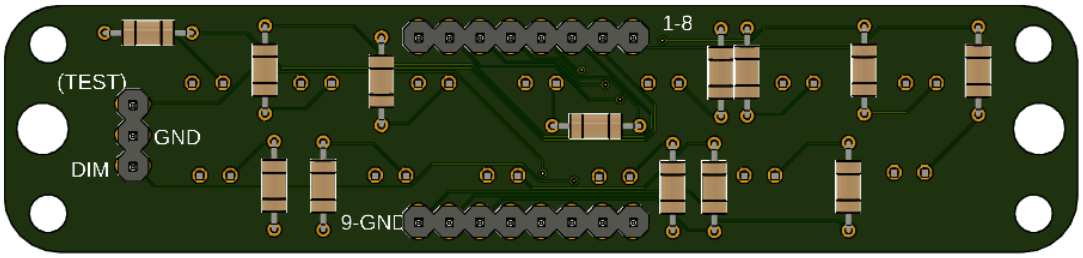
I recommend soldering Resistors, then LEDs, then pin headers.